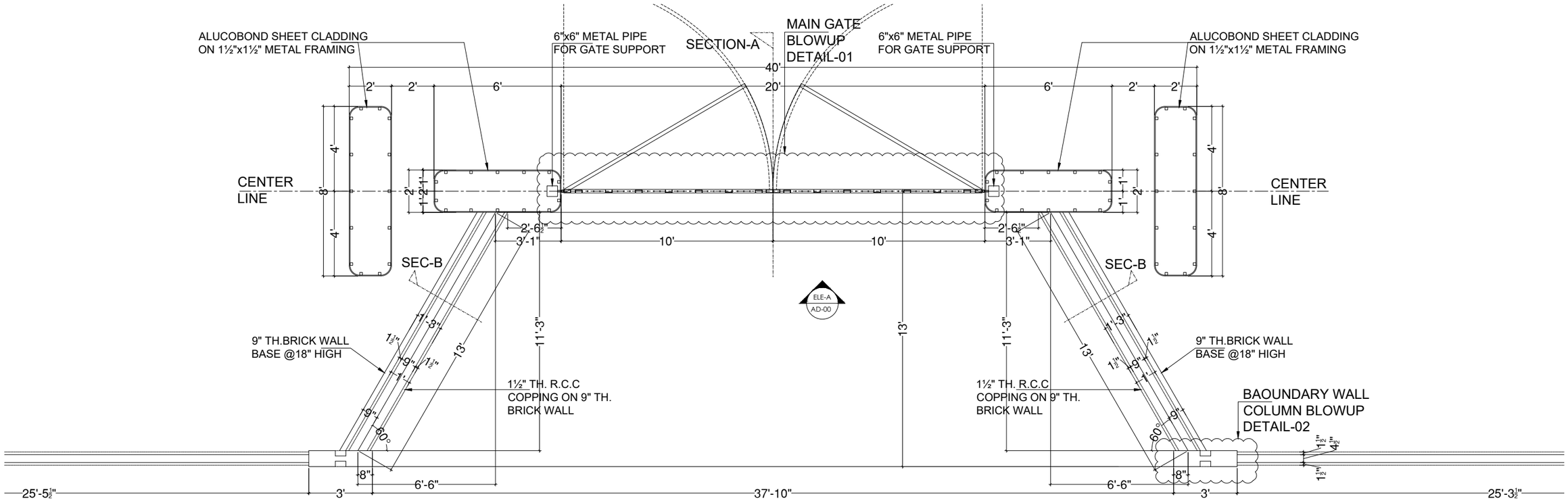

MAIN ENTRANCE GATE CUT PLAN-A
HEIGHT @+1'-0" WITH BOUNDARY WALL

ROAD 10'-0" WIDE

DRAWING NO.: AD-044

NO.	DATE	REVISION

PROJECT: EVENT COMPLEX QADIRABAD FOR MR.GUL NAWAZ KHAN

PROJECT CODE:

ARCHITECTS SIGNATURE:

DRAWING TITLE: WORKING DRAWING

DRAWING DESCRIPTION: MAIN GATE BASE DETAIL

LOCATION: QADIRABAD

SCALE:

DATE: MAY-2026

DRAWN BY: BH.

CHECKED BY: AR.

KASWA DESIGN SERVICES
Consulting Architect & Interior Designers
379 TARIQ BLOCK, NEW GARDEN TOWN, LAHORE
042-35858456, 0336-5858450, kaswadesign@gmail.com

STRUCTURAL CONSULTANT:

ELECTRICAL CONSULTANT: